Decree of the Ministry of the Environment

on fire safety of ventilation systems

Adopted in Helsinki, 18 June 2003

Pursuant to the Decision of the Ministry of the Environment, the following guidelines on fire safety of ventilation systems to be applied for building works are enacted pursuant to Section 13 of the Land Use and Building Act (132/1999) adopted on 5 February 1999.

The guideline has been notified in accordance with Directive 98/34/EC of the European Parliament and of the Council as amended by Directive 98/48/EC laying down a procedure for the provision of information in the field of technical standards and regulations and of rules on Information Society services.

This Decree shall enter into force on 1 January 2004 and shall repeal the Decision of the Ministry of the Interior adopted on 6 November 1980 on fire safety of ventilation installations (E7). The former guidelines may be applied to applications for permit brought up before effectuation of this Decree.

Helsinki, 18 June 2003

Minister of the Environment Jan-Erik Enestam *Technical Adviser, Building Inspection Jouni Vastamäki*

Contents

LEGEND

Guidelines printed in two columns contain acceptable solutions.

Explanations *in smaller type and in italics provide further information and contain references to enactments, regulations and instructions.*

DEFINITIONS

Terminology

Central ventilation systems
Ventilation systems which serve a minimum of two fire compartments. A building may contain both several central ventilation systems and ventilation systems serving a single compartment.

Chamber
A part of a ventilation machine where fans and air treatment equipment are located, or a part of equipment directly connected to a ventilation machine necessary for the transfer or mixing of air.

Fire dampers
Equipment or building elements to prevent the spread of fire from one fire compartment to another for a specified fire resistance time.

Fire insulation
Cladding applied to ventilation ducts or other equipment or structures increasing the fire resistance time. Fire insulation is made of building materials of a minimum class A2–s1, d0.

Fire-resistant ducts or equipment
Ducts or equipment which meet the requirements of the specified fire resistance class. Mostly, fire resistance is achieved by means of fire insulation.

Kitchens in professional use
Kitchens used for food preparation where food is professionally prepared by competent personnel. These include, for instance, kitchens in restaurants, staff canteens, schools, care institutions etc. Generally, kitchens where food is heated or distributed are not regarded as kitchens in professional use.

Locations that are demanding in respect of fire safety and cleanability
Locations where strict requirements are needed for fire safety regarding the implementation of ventilation and cleaning of ducts. These locations include, for instance, local extraction in open-flame grills, professional kitchens, grills, painting shops and plastics industry as well as locations in general where, after the exhaust air has cooled, the duct walls collect waste which adheres tightly and is flammable and difficult to clean.

Shaft
Generally, a vertical space, encased with fire-separating building elements, where ventilation ducts and possibly other pipes and cables are located. A light-weight non-fire-separating casing does not constitute a shaft.

Smoke damper
A device, equipment or building element which restricts smoke generated at the initial stages of fire from spreading via ventilation systems in a fire compartment or from one fire compartment to another.

Spaces presenting a fire or explosion hazard
These guidelines regard the following spaces as fire or explosion hazards.

A fire compartments, where explosives are manufactured, handled or stored, are regarded as spaces presenting an explosion hazard.

B fire compartments, where flammable gases or flammable liquids are handled or stored to the extent that the activities require a licence or an inspection by the authorities or a notification to the authorities, are regarded as spaces presenting a fire or explosion hazard.

These fire compartments include, for instance, spray painting shops, surface treatment departments using flammable liquids, reinforced plastics factories, plants manufacturing flammable gases or flammable liquids, technical treatment plants for flammable liquids, storage depots for flammable gases or flammable liquids.

C fire compartments, where combustible materials occur as chips, dust, gauze, fibre or in any other micronic form, are regarded as spaces presenting a fire or explosion hazard.

These fire compartments include, for instance, machining premises of dry timber in the mechanical woodworking industry, mills, bakeries, animal feed factories, textile factories, laundries, peat handling plants, coal handling plants.

D in ventilation engineering terms the following may be regarded as spaces presenting a fire hazard:

Plastics, foam plastics and foam rubber factories and stores, tyre stores, distribution substations (oil transformers).

Ventilation plants
Rooms where various ventilation and/or air transfer equipment is located.

For other definitions and terms used in these guidelines, reference is made to Parts E1 and D2 of the National Building Code of Finland.

1 SCOPE

These guidelines concern ventilation systems serving several fire compartments (central ventilation systems) and also, where applicable, ventilation systems serving a single fire compartment.

Where applicable, these guidelines may also be applied to fire safety of installations other than actual ventilation systems. Other installations include, for instance, ducts in warm air generators, outlet ducts for sawdust, dust etc., transfer ducts for materials etc.

Explanation
The Ministry of the Environment has issued a guide "Ilmanvaihtolaitteistojen paloturvallisuus" (Fire safety of ventilation systems) on the application of the guidelines.

2 GENERAL INSTRUCTIONS

Part D2 of the National Building Code of Finland lays down regulations and guidelines on indoor air and ventilation in buildings. Part E1 of the Building Code gives basic requirements to limit the spread of fire and smoke in buildings and from one building to another. These guidelines describe solutions which meet the requirements in E1.

Ventilation systems are designed and implemented so that their operation is ensured under all operating conditions. Ventilation systems based on automation, conforming to the guidelines, require effective and methodical testing, service and maintenance operations.

Explanation
Part A4 of the Building Code contains the regulations and guidelines on preparation of operating and service instructions for buildings and building elements.

Instead of the fire technical classification for building materials used in these guidelines, the classification in accordance with the earlier fire regulations may be used for building works where permission has been applied for before 1 January 2007. Annex 1 includes a table showing the correspondence between the new and old classes.

3 PREVENTION OF SPREAD OF FIRE IN FIRE COMPARTMENTS

3.1 Materials for ventilation ducts

Materials for walls in ventilation ducts and duct elements are selected so that the ducts and duct elements can withstand the actions they are exposed to, such as heat and cleaning. Generally, the walls of ventilation ducts and duct components are made of building materials of a minimum class A2–s1, d0.

When the air to be extracted contains corrosive gases in quantities harmful in respect of duct durability, the ducts are made of building materials which can withstand these conditions. In such cases, building materials other than class A2–s1, d0 may also be used at discretion. However, the ducts must then be taken as directly as possible out to the roof of the building as separate ducts. Ducts in areas of another fire compartment are placed in a separate shaft in accordance with paragraph 4.5.

The wall thickness of ducts and duct materials manufactured of ordinary steel sheets may be selected as follows:

Circular duct	Material thickness
63 – 315 mm	minimum 0.5 mm
400 – 800 mm	minimum 0.7 mm
1000 – 1250 mm	minimum 0.9 mm

Rectangular duct	Material thickness
longer side ≤ 300 mm	minimum 0.5 mm
longer side 300 – 800 mm	minimum 0.7 mm
longer side > 800 mm	minimum 0.9 mm.

Internal ducts in fire compartments may be thinner over a short distance than those referred to above, with the exception of the local extraction ducts in kitchens. In this case, they must be easy to clean or replace.

The wall thickness of ducts and duct elements manufactured of steel in locations that are demanding in respect of fire safety and cleanability, is a minimum of 1.25 mm.

Materials which meet the classification requirements stated in paragraph 8.2 of E1, are used as a

surface or cladding of external insulation of ventilation ducts.

Materials other than class A2–s1, d0 may also be used to a minor extent in air ducts and ventilation systems as well as in their joints and facilities unless this causes a hazard in a fire situation.

Materials other than class A2–s1, d0 may be used in ventilation systems, i.a., as follows:

- suspended ceilings with fixtures, class requirement for surfaces is B–s1, d0,
- raised floors with supporting structures, class requirement for surfaces is B–s1, d0,
- ventilation ducts in apartments specific to dwellings, with the exception of local extraction ducts in kitchens, class requirement is C–s2, d1,
- ducts serving a single dwelling in buildings of class P3, with the exception of local extraction ducts in kitchens, class requirement including their insulation is D–s2, d2.

3.2 Fire resistance of ventilation ducts

The fire resistance of ventilation ducts against internal fire within the fire compartments served by them is selected as follows:

- the fire resistance of local extraction ducts for kitchen stoves in buildings of class P2 and P3, in attic and attic cavity compartments, is EI 30.

- the fire resistance of local extraction ducts in locations that are demanding in respect of fire safety and cleanability, is EI 60 (Fig. 1).

- the fire resistance of local extraction ducts in spaces presenting a fire or explosion hazard, is EI 60 (Fig. 2).

The ventilation ducts mentioned above are fixed and supported so that, in a fire situation, they remain in place for the minimum fire-resistance period required from them.

Joints in ducts are made so that they will not reduce the fire resistance of the ducts.

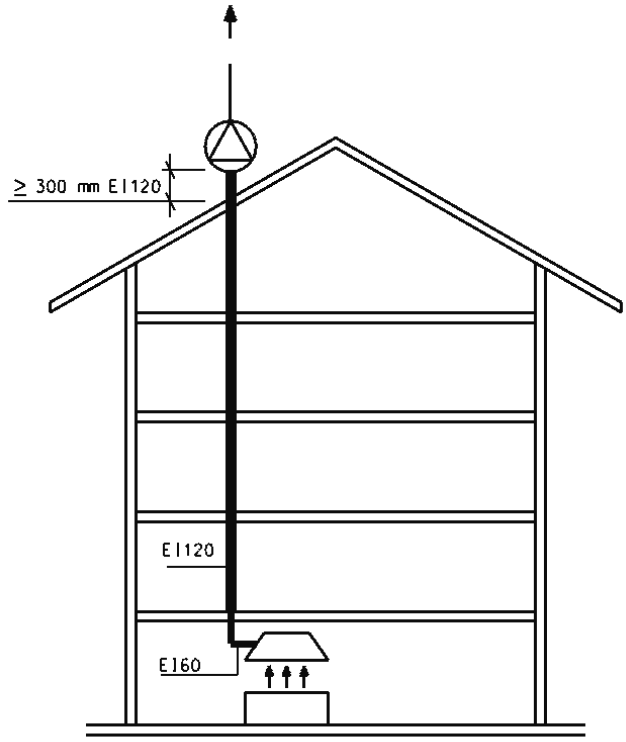

Fig. 1.
Fire resistance of a local extraction duct, for instance, in a kitchen used professionally.

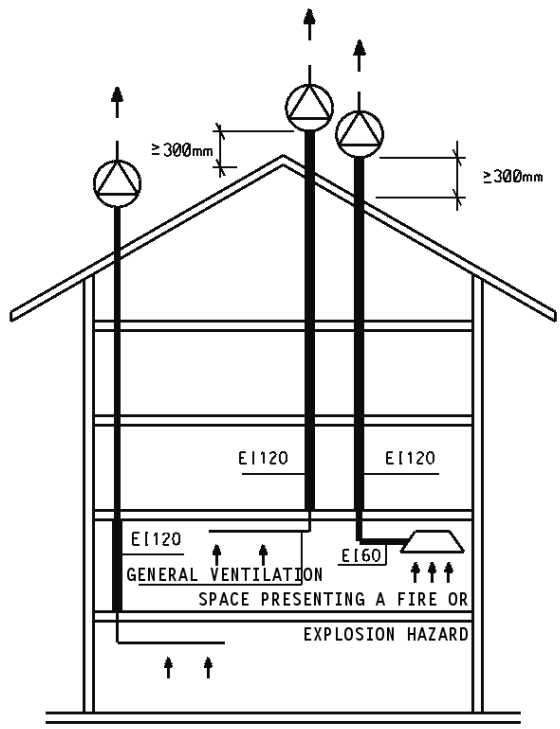

Fig. 2.
Fire resistance of ventilation ducts in a space presenting a fire or explosion hazard.

4

PREVENTION OF SPREAD OF FIRE FROM ONE COMPARTMENT TO ANOTHER

The spread of fire from one compartment to another can be prevented with restrictions on connections of air ducts, with the use of fire dampers and fire resistant ducts.

4.1 Restrictions on connections

Dwellings, accommodation premises and care institutions must not in general be connected to central ventilation systems serving other categories of use of buildings.

Kitchens in residential buildings, storage spaces of household goods, offices and assembly rooms with a maximum area of 300 m^2 may be connected with separate ducts to a central ventilation system shared with dwellings.

General ventilation in spaces presenting a fire or explosion hazard is not connected to a central ventilation system (Fig. 2).

Exits are not connected to a central ventilation system.

Local extraction ducts in locations that are demanding in respect of fire safety and cleanability, and in spaces presenting a fire or explosion hazard, are taken as a separate duct out to the roof of the building as directly as possible (Fig. 2).

4.2 Use of fire dampers

When ventilation ducts penetrate fire-separating building elements, the ducts are generally provided with a fire damper. The fire damper is in general selected so that it meets the requirements for the fire-resistance period of the fire-separating building elements penetrated by the ducts (Fig. 3).

If the integrity of a fire damper is adequate but it does not meet the insulation requirements for fire-separating building elements, the penetration can be implemented by fire-insulating the duct on both sides of the fire-separating structure in accordance with Table 1 (Fig. 3).

If a fire damper only partly meets the requirements for the fire-resistance period in respect of insulation, this period may be taken into account in the design of the penetration.

No insulation requirements are imposed on a fire damper if the duct area is a maximum of 200 cm^2.

When the ventilation plant in a residential building is located above the spaces it is serving, no closing action is required of the fire damper in vertical ducts between the storeys. In this case the nominal size of the duct is a maximum of 200 cm^2.

Sufficiently fast acting and reliable equipment is used as a release mechanism in fire dampers.

The closing temperature of a fire damper with a thermal release mechanism, is generally 70 °C ± 5 °C. In special cases, a higher closing temperature may be selected, unless this causes a danger to fire and life safety. In building works which are demanding from the point of life safety a lower temperature is selected, if necessary

A fire damper is installed so that its working order is maintained for the fire-resistance period required from it.

4.3 Fire resistance of ventilation ducts

When ventilation ducts pass through one or more fire compartments without opening to them, the fire dampers, conforming to paragraph 4.2, may be replaced with ducts which meet fire resistance requirements and with equipment related to them. The fire resistance of a duct is selected so that the fire-separation is not weakened (Fig. 4).

Fire resistant ventilation ducts are fixed and supported so that, in a fire situation, they remain in place for the minimum fire-resistance period required from them.

Irrelevant electrical equipment or cables are not installed in ventilation ducts due to danger of ignition and generation and spreading of combustion gases.

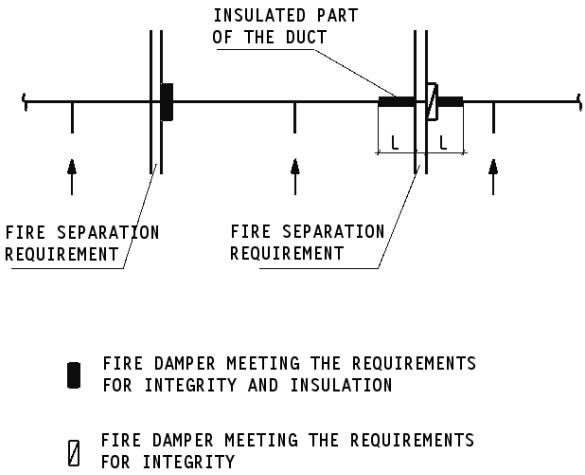

Fig. 3.
Prevention of the spread of fire from one fire compartment to another using fire dampers. The length L required by the fire insulation shown in the picture is selected from Table 1.

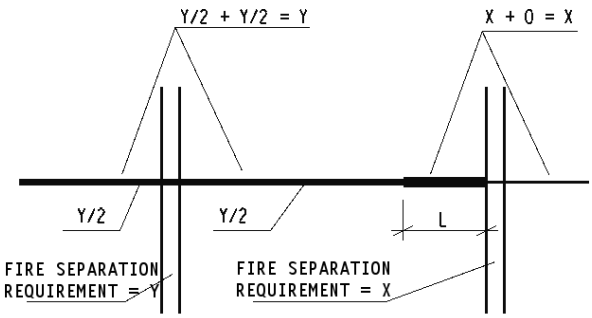

Fig. 4.
Fire resistance of a duct passing through a fire compartment without opening to it when no fire dampers are used. The length L required by the thicker fire insulation shown in the picture is selected from Table 1.

TABLE 1
FIRE INSULATION OF DUCTS WHEN A FIRE DAMPER DOES NOT MEET THE INSULATION REQUIREMENTS

Fire resistance requirement of the building element (min)	Nominal size of the duct	
	≤ 300	> 300
	Length of the insulated duct section L (m).	
30	0.5	1.0
60	1.0	2.0
90...120	2.0	4.0
240	4.0	4.0

Note to the table:
The nominal size of the duct refers to the internal dimension of a round duct or to the internal dimension of the longer side of a rectangular duct.

4.4 Fire resistance of ventilation ducts in special cases

To prevent the spread of fire from one fire compartment to another, the fire resistance of ventilation ducts is selected as follows:

- The fire resistance of local exhaust ducts in locations that are demanding in respect of fire safety and cleanability, is EI 120 within other fire compartments (Fig. 1).
- The fire resistance of both local extraction ducts and general ventilation ducts in spaces presenting a fire or explosion hazard, is EI 120 within other fire compartments (Fig. 2)
- The fire resistance of ducts passing through spaces presenting a fire or explosion hazard, is EI 120 (Fig. 2).

4.5 Fire resistance of shafts

In the design of shafts and casing structures, care is taken to ensure that the classification requirements for fire-separating building elements, stated in Part E1 of the Building Code, are met.

When installing ventilation ducts in a **shaft,** the fire-resistance period of its walls is selected so that no fire can spread from one fire compartment to another within a certain period of time. The fire-resistance period of a shaft wall may be taken into account when calculating the total fire-resistance period (Fig. 5).

Shaft walls are made of building materials of a minimum class A2–s1, d0.

Ventilation ducts are fitted with fire dampers at the shaft walls. In these cases, no fire insulation is required for ducts in the shaft if the shaft wall is dimensioned on the basis of the fire class for the duct with the highest fire class requirement.

If a shaft contains building materials such as pipes, cables and insulation which do not meet the requirements of class A2–s1, d0, the shaft is partitioned at the horizontal fire-separating structure with building materials of a minimum class A2–s1, d0.

When installing ventilation ducts **in a casing of light construction,** the spread of fire from one fire compartment to another is prevented with fire dampers and fire-resistant ducts for a specified fire-resistance period in accordance with the prin-

ciples shown in Fig. 6. The casing of light construction is partitioned at the horizontal fire-separating structure with building materials of class A2–s1, d0 so that the fire-separation is not essentially weakened.

A casing of light construction is made so that it meets the fire resistance requirements imposed on internal building elements of the said compartment.

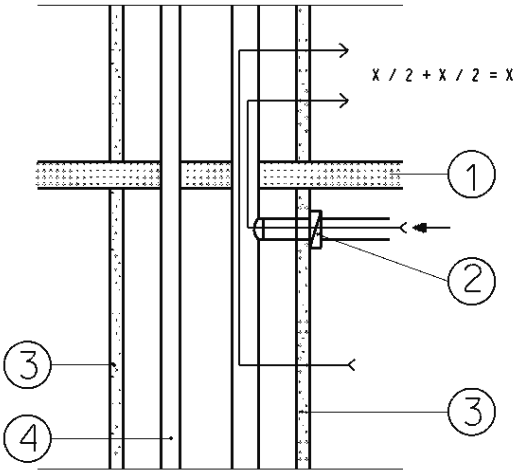

1. Fire-separation requirement = x
2. Fire resistance requirement of the fire damper = x/2
3. Fire resistance requirement of the shaft wall = x/2
4. Building material that does not meet the requirements of class A2–s1, d0.

Fig. 5.
Fire resistance of a shaft.

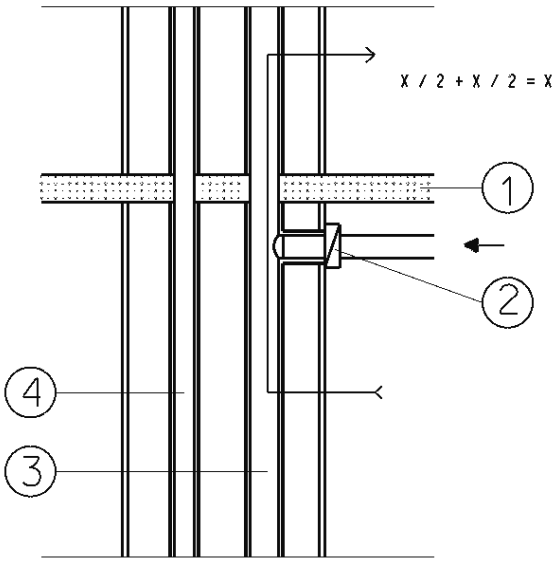

1. Fire-separation requirement = x
2. Fire resistance requirement of the fire damper = x/2
3. Fire resistance requirement of the ventilation duct = x/2
4. Building material that does not meet the requirements of class A2–s1, d0.

Fig. 6.
Installation of ventilation ducts in a casing of light construction.

4.6 Ventilation plants and chambers

The machines of central ventilation systems are located in a ventilation plant or chamber which meets the fire resistance requirements. This is not necessary if the machines are located outside the building so that they do not cause a risk of spread of fire.

If the machines of ventilation systems serving a single fire compartment are located within another fire compartment, they are fire-insulated in accordance with paragraph 4.3 or they are located in a casing which meets the corresponding fire resistance requirements, or in a fire-separated ventilation plant.

Ventilation plants or chambers of central ventilation systems are set up as separate fire compartments. In buildings of class P1, fire-separation is implemented using building elements of class A2–s1, d0 in accordance with class EI 60.

In residential and business buildings of class P2 with 3–4 storeys, fire-separation is implemented according to class EI 60. In other buildings of class P2, the requirement for fire-separation is EI 30. The class requirement for internal wall and ceiling surfaces in these spaces is B–s1, d0. When necessary, internal surfaces are provided with a protective covering in accordance with paragraph 8.2.3 of part E1 of the Building Code.

In buildings of class P3, fire separation is implemented using building elements of class EI 30. The class requirement for internal wall and ceiling surfaces is B–s1, d0

Floors in ventilation plants or chambers are made of building materials of a minimum class D_{FL}–s1.

The fire-resistance period for doors in ventilation plants and chambers is at least a half of the fire-resistance period for the walls.

5 PREVENTION OF SPREAD OF FIRE TO ROOFS OR EXTERNALLY TO OTHER FIRE COMPARTMENTS

If ventilation plants of central ventilation systems are located partly or completely above the roof, the ventilation plants are fire-separated 300 mm above the roof unless building materials of a minimum class A2–s1, d0 are used for the roof structures.

If the same building has roofs at different heights and the ventilation plant is located on a lower roof, it must be ensured that fire cannot spread quickly from the ventilation plant to another fire compartment located in a higher part. For this reason, if the ventilation plants are located at a distance of less than four metres from the external wall of the higher part, the external walls of the ventilation plant or of the higher part and, if necessary, the roof of the ventilation plant are constructed as fire-separating building elements up to a distance of four metres (Fig. 7).

The fire insulation for local extraction ducts in locations that are demanding in respect of fire safety and cleanability and for ducts serving spaces presenting a fire or explosion hazard, is extended 300 mm above the roof unless building materials of a minimum class A2–s1, d0 are used for the roof structures.

Fresh air and exhaust air openings are located so that fire cannot quickly spread through them to another fire compartment.

Explanation
Part D2 of the National Building Code of Finland contains regulations and guidelines on location of fresh air and exhaust air openings.

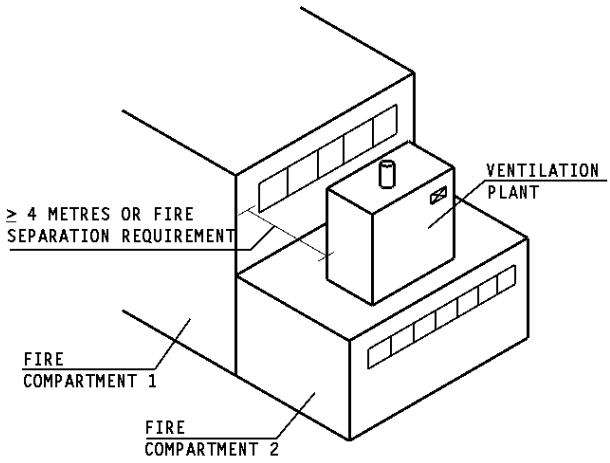

Fig. 7
How the difference in roof heights affects the location and structures in ventilation plants.

6 LIMITATION OF SPREAD OF SMOKE

6.1 Methods to limit the spread of smoke

The spread of smoke via the ventilation system from one space or compartment to another may be prevented if the said spaces or fire compartments are not connected to a common ventilation system.

At the initial stages of fire, the spread of smoke via ventilation systems may be limited by using, for instance, the following devices, equipment or building elements:

- throttling devices referring to exhaust or supply air devices effectively restricting the spread of smoke, or any other devices with an adequate flow resistance. The maximum permitted space-specific air flow passing through a throttling device or devices is 42 dm^3/s at a pressure difference of 100 Pa,

- risers referring to rising supply or extract air ducts. The vertical rise of a riser, used as a smoke damper, is a minimum of 2.5 metres and its diameter or longer side is a maximum of 10 % of the length of the riser.

- controlled fire dampers with their closing action controlled by a smoke detector located near them or by an automatic fire

alarm system in a location operated by smoke detectors. Fire dampers are controlled by automatic fire alarm systems at least on a compartment by compartment basis.

Automatic fire safety systems, which may have been installed in a building for other reasons, may be utilised in limiting the spread of smoke.

6.2 Limitation in fire compartments

The spread of smoke is limited between the living quarters and accommodation rooms in care institutions. In addition, limitation is also justified in other spaces intended for occupants whose means of escape are inferior than normally, due to their reduced capabilities.

6.3 Limitation from one fire compartment to another

The spread of smoke from one fire compartment to another is limited in dwellings, in care institutions accommodating over 25 persons, in day care institutions accommodating over 25 persons and in accommodation premises accommodating over 50 persons.

To safeguard the occupant's possibilities of escape, facilitate rescue and fire-fighting operations and restrict any damage to property, limitation of smoke may also be required in spaces other than those mentioned above. This may be justified for instance for large assembly and business premises.

6.4 Fire safety of heat recovery units

Heat recovery units are selected so that they will not under any circumstances essentially increase the risk of fire and smoke spread in the following cases:

- a heat recovery unit serves a space presenting a fire or explosion hazard,
- a heat recovery unit serves a space that is demanding in respect of fire safety and cleanability,
- a requirement for a fire-resistance period has been imposed on the extract and supply air ducts.

Such units consist of heat recovery units where heat is transferred by means of normal heating equipment and a medium, such as water or a glycol solution.

6.5 Control of ventilation systems

If a building is provided with an automatic fire-extinguishing system or an automatic fire alarm system, the fans and fire dampers of the ventilation systems and, if necessary, also any other equipment may be controlled from a fire alarm initiated by them.

7 USE OF TRANSFERRED, RETURNED AND CIRCULATED AIR

Transferred or returned air from another fire compartment is not used as supply air for dwellings, accommodation premises and care institutions.

Transferred or returned air is not used for the ventilation of fire-separated exits.

The use of circulated air does not, in general, produce any requirements for fire resistance.

Explanation
Part D2 of the National Building Code of Finland gives regulations and guidelines on the use of transferred, returned and circulated air.

8 USE OF SPACES BETWEEN STRUCTURES FOR DUCTING AIR

Ventilation systems and ducts may be located in a space between a suspended ceiling and a floor. However, exhaust air terminal devices are generally not located there due to the accumulation of dust.

Extract air terminal devices and cooling equipment may also be located in a space between a suspended ceiling and a floor if the suspended ceiling consists of an open latticework or a grid where 75 % of the total area consists of openings.

The space above a suspended ceiling or a part of it may be used, as it stands, to duct supply air. In this case a suspended ceiling with its supporting and

mounting structures is made of building materials of a minimum class B–s1, d0.

Supply and exhaust air is generally ducted in ducts in the space below a raised floor. If it is required that the space below a raised floor is used to duct air, it is considered a duct. In this case, the raised floor with its supporting structures and the floor is constructed of building materials of a minimum class B–s1, d0. In this case, no cables or any other fire loads are located in the interspace used as a duct.

The space between floors and installation floors in computer premises and other technical premises may be used for circulation of cooling air inside fire compartments.

When using the spaces between structures to duct air, they must meet the requirements imposed on the air-tightness of ventilation ducts stated in Part D2 of the National Building Code of Finland.

9 LABELLING

Inspection and cleaning panels are provided with permanent labels, displayed in a prominent place, indicating the location of the panel.

If ventilation ducts are fitted with fire dampers which, when they close, may cause an accident, the inspection and cleaning panels of the fire dampers are provided with a warning to this effect.

Ventilation plants and chambers provided with doors are clearly marked with a text or a plate, located in a prominent place, indicating the purpose of the rooms or installations.

ANNEX

FIRE TECHNICAL CLASSIFICATION OF BUILDING MATERIALS

TABLE I
Estimated equivalence of classes for reaction to fire performance of building materials included in the present fire regulations and those previously in force.

Building Code E1/1997	Building Code E1/2002
Non-combustible building material	A2–s1, d0 or A1
Nearly non-combustible building material	A2–s1, d0
Surface 1/I	B–s1, d0
Surface 1/II and 1/-	C–s2, d1
Surface 2/–	D–s2, d2
Surface –/–	F
Flooring of class L	D_{FL}–s1

Further information on the European classification system based on the reaction to fire performance of building materials can be found in the guide "Suomen ympäristö 519, Rakennustarvikkeiden uudet eurooppalaiset paloluokitukset Suomen rakentamismääräyksissä" (The Finnish Environment 519, The new European fire classification system for building products in Finnish building regulations).